NORTHERN WOLVES AIR CONDITIONING

SUBMITTAL TRANSMITTAL

Project:	Saddle River Day School	**Submittal No:**	038
Location:	147 Chestnut Ridge Rd., Saddle River, NJ 07458	**Spec Section:**	232113
Engineer:	Johnson & Urban, 295 Route 34 Colts Neck, NJ 07722	**Date:**	03/22/2026
Architect:	DIGroup Architecture	**Project No:**	DIG #22.036

EQUIPMENT/MATERIAL SUBMITTED:

Condensate removal pumps for HVAC equipment where gravity drain is not available. Little Giant automatic condensate pumps for air conditioning, furnace, and boiler condensate removal.

Product	Capacity	Head	Power
Little Giant Condensate Pump	Per schedule	20 ft max	115V/1Ph

COMPLIANCE NOTES:

- UL listed condensate pump assembly
- Automatic float switch operation
- Safety overflow switch with equipment interlock
- ABS reservoir for chemical resistance
- Suitable for condensing boiler acidic condensate
- Compliant with Section 232113 piping requirements

NOTES:

Condensate pump required where gravity drain is not feasible. Safety switch to interlock with served equipment. Discharge to approved drain per plumbing code.

Submitted By: Northern Wolves Air Conditioning
Email: ruslan@northernwolvesac.com

VCCA-20-P SERIES

APPLICATIONS

- Designed for automatic collection and removal of condensate from air conditioning, refrigeration, and dehumidification equipment when gravity drainage is not possible or practical. The VCCA Series' low tank height allows these condensate pumps to be used where other condensate pumps will not fit.
- Suitable for plenum applications as it is constructed with materials that have been tested by and meet Underwriter's Laboratories' Standard 2043 "Fire Test for Heat and Visible Smoke Release for Discrete Products and their Accessories Installed in Air Handling Spaces".

FEATURES

- The pump is labeled "suitable for use in air handling spaces"
- 1/30 hp motor
- Low profile for limited space applications
- 72" 3-conductor lead wires with adjustable conduit fitting for 1/2" diameter flexible metal conduit
- 1/4-turn, twist-off locking check valve discharge adapter for 3/8" ID tubing
- Additional check valve included for 3/8" copper tubing
- Pump switch test lever (for manual test operation)
- Rubber feet on bottom of tank to isolate pump when placed on hard surface
- Three 1-1/8" diameter inlets
- Easy-to-knock-out plugs in two of the inlet openings
- Includes overflow detection switch with 72" leads
- Intermittent liquid temperature up to 140 °F
- Designed for hard-wire installation only
- Thermal overload protection
- Stainless steel motor shaft
- cCSAus

SERIES SPECIFICATIONS

Item No.	Model No.	HP	Input Voltage	Hz	Amps	Watts	Discharge Size	Performance GPH (LPH) @ Head*				Shut-Off (ft)	PSI	Cord (ft)	Weight (lbs)
								1'	5'	10'	18'				
554221101	VCCA-20-P	1/30	115	60	1.5	93	3/8" (9.5mm) OD Barded	80 (303)	70 (265)	45 (171)	10 (38)	20 (6.1m)	8.6	6 (1.8m)	4.5 (2.1 kg)
554222101	VCCA-20-P	1/30	230	50/60	0.6/0.5	75	3/8" (9.5mm) OD Barded	80 (303)	70 (265)	45 (171)	10 (38)	17 (5.2m)	7.4	6 (1.8m)	4.5 (2.1 kg)

Note: Flow rating is through check valve

VCCA-20-P SERIES

ENGINEERING DATA

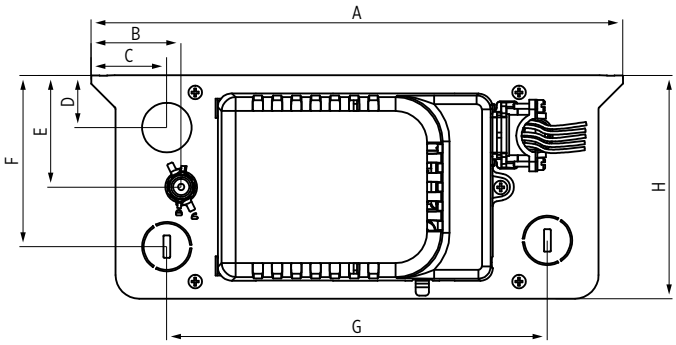

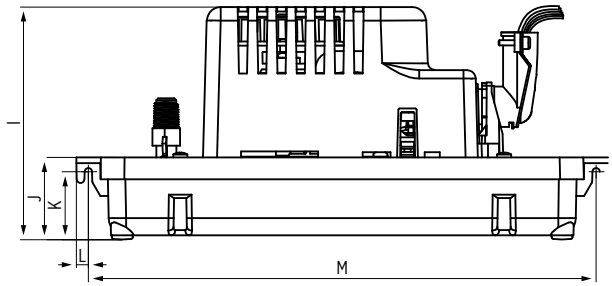

A	B	C	D	E	F	G	H	I	J	K	L	M
11.99″ (304.5 mm)	2.02″ (51.4 mm)	1.70″ (43.2 mm)	1.18″ (30 mm)	2.52″ (64 mm)	3.85″ (98 mm)	8.57″ (217.8 mm)	5.03″ (127.7 mm)	5.24″ (133.2 mm)	1.85″ (47 mm)	1.52″ (38.8 mm)	0.27″ (6.9 mm)	290.6″ (11.44 mm)

PERFORMANCE DATA

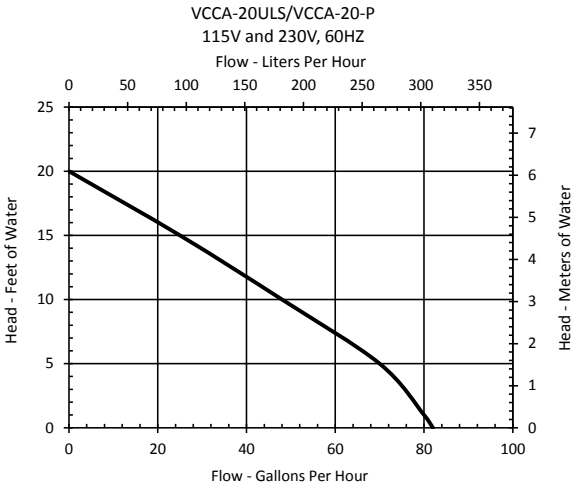

CONSTRUCTION

Motor	1/30 hp
Discharge	3/8″ O.D. barbed
Housing/Tank Cover	Polypropylene
Motor Cover	Polypropylene
Volute	Polypropylene
Tank	Polypropylene
Impeller	Polypropylene
Check Valve	Acetal